PhaseGuard ST 40

In-line Interface Monitor for Turbidity

Applications
- Monitoring and controlling of interfaces in beverages such as beer, fruit juices, etc.
- Optimization of beer / yeast separation steps
- Monitoring of clean in pipe processes (CIP), e.g. in the dairy industry
- Minimizing product losses and increasing yields
- Recognition of interfaces for product change over or product push-out
- Faster processing time due to better resolution of start-stop conditions

Advantages
- In-Line Sensing – proven solution for phase detection through turbidity
- Real-Time Monitoring with very short response time
- Process Optimization & Control, CIP-Monitoring
- Permanent device monitoring in the background
- Extremely low maintenance e.g. due to seal-less design
- Cost efficiency & high reliability
- Coloured display and simple configuration directly on the device
- Simple configuration directly on the device and easy system integration
- Hygienic design according to EHEDG and compliant to Regulation (EC) No 1935/2004 on materials and articles intended to come into contact with food
- Swiss Engineering / Swiss Made

Industries
- Beverages, Food and dairy industry
- Chemistry
- Pharmacy

sigrist.com

www.cic-analytic.com
Blas Parera 4035, Olivos, Buenos Aires – Argentina
ventas@cic-analytic.com
Tel: +54 11 4717 - 4423

Innovations with tangible benefits

A universally applicable device for phase detection in a large measuring range. Simple installation in a standard housing without tools, integrated measured value display and maximum flexibility in configuration and communication – this is what modern process measuring devices look like today.

Quality and fast response

Precisely distinguishes between different phases—such as the critical beer/yeast separation or cleaning cycles (CIP) — in real time.
The PhaseGuard ST 40 allows for reliable, consistent and optimal separation, helping to ensure the final product's quality.
Integrates directly into the process, giving continuous, real-time feedback without interrupting production.

Enhanced Process Control

Reduces product loss and minimizes downtime by offering early detection of any phase transitions.
The measuring setup has proven itself over many years.
The PhaseGuard ST 40 and has been further optimised in the new generation for dependable performance with reduced downtime and minimal servicing needs — key for the demanding environment of brewing and other processes.

Innovative appliance design for fast ROI

Features a seal-less, robust design (for example, using durable sapphire windows and LED) which minimizes maintenance requirements and operating costs. Gone are the days of maintenance and servicing work caused by periodically changing seals. The seal-less design with sapphire windows is tried and tested. It allows the use in practically all process applications – from turbidity detection in the brewing process to monitoring in chemical processes

- Easy installation in VARINLINE® housing
- Integrated status display and operating unit provide information directly at the measuring point
- Permanent humidity and temperature monitoring
- Low total cost of ownership (TCO)

Ease of Integration

The PhaseGuard ST 40 provides various data interfaces from 0/4...20 mA current outputs to various process buses for continuous process monitoring.

- Permanent accessibility to measured values and status information
- Increased data security
- Access via smartphones for advanced configuration and maintenance

Main technical details

Measuring principle	Absorption
Wavelength	LED 870 nm
Measuring range	0...100% Absorption
Resolution	0.5 % Absorption
Accuracy	+/-1% Absorption *
Response time	<0.3 s at 0 s integration time (step response –> limit value switch)
Cleaning	CIP/SIP- compatible until 120 °C @2h
Protection class	IP 66

* in reference to factory standard

Details and technical data:

Subject to change without notice, Doc. No. 16821E/1

sigrist.com

Sigrist-Photometer AG
Hofurlistrasse 1 · CH-6373 Ennetbürgen

+41 41 624 54 54
info@sigrist.com

PhaseGuard ST 40

Technical data

Measuring principal	Absorption
Wavelength	870 nm
Measuring range	0..100%
Resolution	0.5 % Absorption
Accuracy	+/-1% Absorption *
Response time	< 0.3 s at 0 Seconds Integration time (Step response →limit value switch)
Path length	10 mm (Modell PhaseGuard ST 40 S2XX - 0000) 5 mm (Modell PhaseGuard ST 40 H2XX - 8000)
Medium temperature	-10 ... +100 °C -10 ... +85°C at ambient temperature 55°C -10 ... +75°C at ambient temperature 60°C
Cleaning	CIP/SIP- compatible up to 120 °C @2h
Surroundings	-10 ... +50 °C 0 ... 100 % relative humidity
Medium pressure	Max. 1 MPa (10 bar) @100 °C
Pipe connections	Inline VARINLINE® - housing or compatible DN 40 ... DN 150, 1 1/2"... 6"
Operating voltage	24 VDC ± 10 % (Interface PoE according to standard)
Warm-up time	< 3 min
Power consumption	Max. 3 W
Protection class	IP 66
Dimensions	Ø 100.5 x 137 mm
Material	Housing: Stainless steel 1.4301 / AISI 304 Sensor head material: Stainless steel 1.4404 / AISI 316L Window material: Sapphire Touchscreen: Soda-Lime tempering glas
Weight	1.5 kg
Display	Display: 2.4" with Touchscreen Resolution: 320 x 240 Pixel

Interfaces

LT (Standard)	1 Current output 0/4 ... 20 mA, max. 700 Ohm, 1 digital input, 2 digital outputs
IO	6 configurable inputs/outputs: - Max. 2 digital inputs: 5 ... 28 VDC - Max. 4 digital outputs: High-Side Switch max. 20 mA - Max. 4 current outputs: 0/4 ... 20 mA, max. 700 Ohm - Modbus RTU
PoE	Ethernet LAN connection with Power over Ethernet: - Ethernet according to 10/100BaseT - POE according to 802.3af, Class 0 - Sigrist Web interface
Profibus	Profibus DP-V1 Slave
Profinet	Profinet IO, Conformity class B

* in reference to factory standard

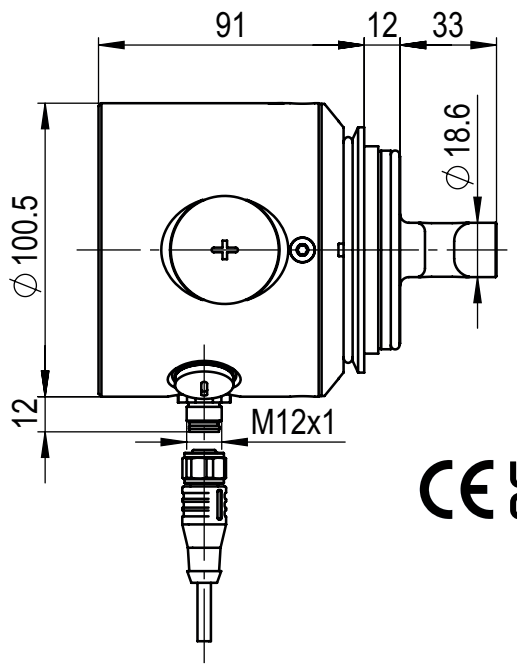

Subject to change without notice, Doc. No. 16821E/1

sigrist.com

Sigrist-Photometer AG
Hofurlistrasse 1 · CH-6373 Ennetbürgen

+41 41 624 54 54
info@sigrist.com